RB SERIES CONTROL CHOKE

MULTI-ORIFICE NOZZLE VALVE

PUTTING YOU IN CONTROL OF YOUR SYSTEM!

JAN0108-TVT-OKC

Dynamic Energy Conversion

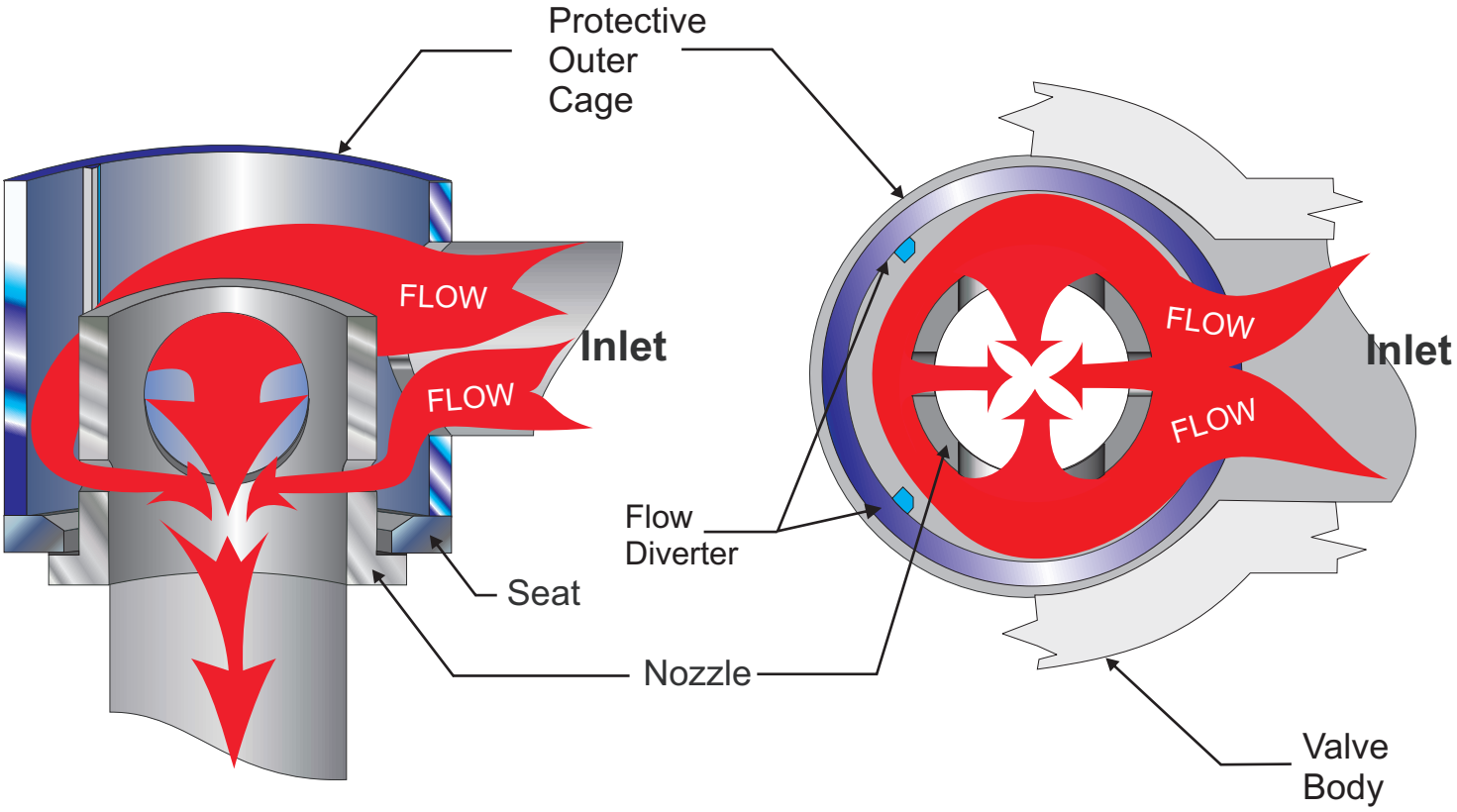

Side view of the fluid flow through the valve

Flow Converging in the center line of the nozzle

When the valve is open and flowing, the flow enters through the inlet of the valve into the protective cage, is circulated around the annulus created by the cage, nozzle and sleeve assembly. The symmetry of the ports in the nozzle cause the high velocity fluid streams created by the pressure drop to collide into each other in the center line of the trim. The impact of the streams converts most of the energy and protects the downstream components from damage

Multi Orifice Nozzle Technology

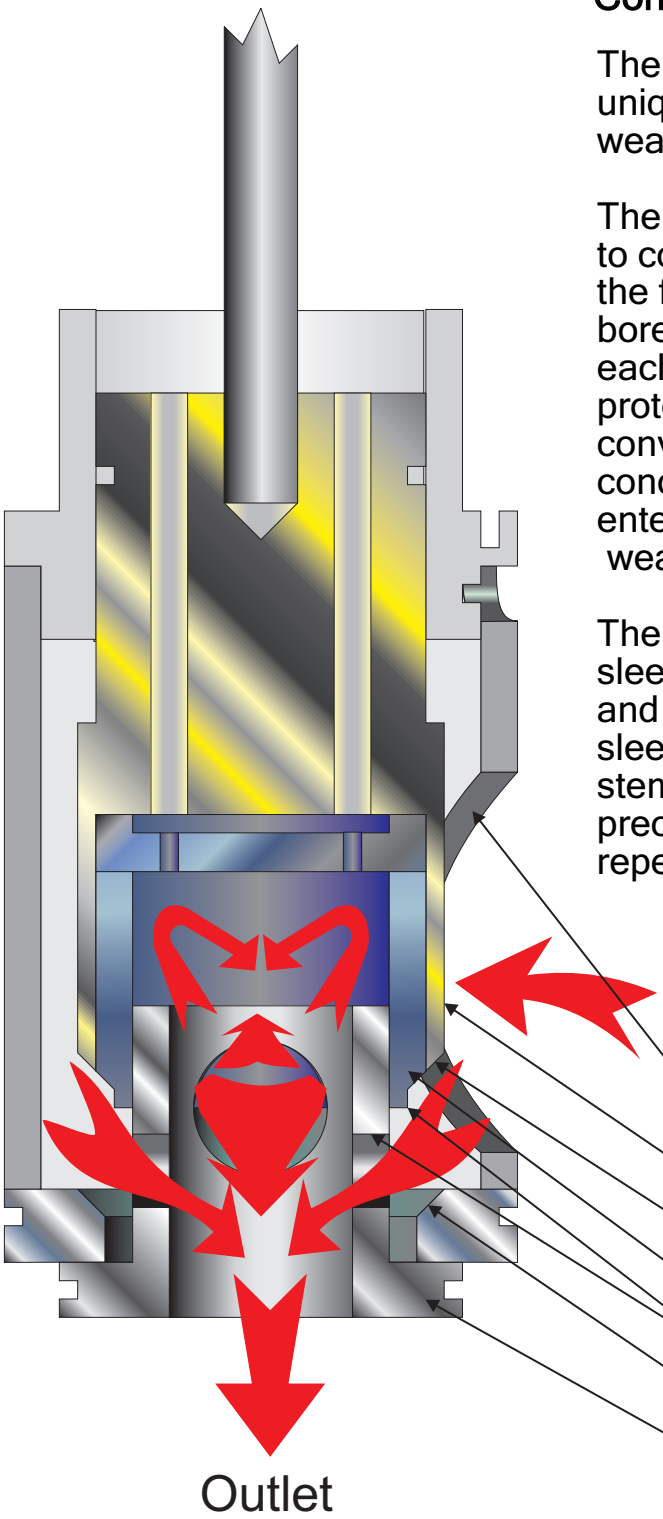

Control Element

The R-B Series control valve features several unique design characteristics that minimize wear and maximize service life.

The nozzle and external sleeve trim is designed to contain turbulence and wear by managing the flow into the nozzle and centralizing it into bore causing the flow streams to impinge on each other. The valve body and outlet are protected from wear because the energy conversion as result of the pressure drop is concentrated in the trim cavity before flow enters the outlet. This eliminates the typical wear problems in the valve outlet.

The Upstream and Downstream balanced sleeve design greatly reduces the breakway and closing thrust requirements to lift the sleeve on and off seat as well as during stem travel making the control stable and precise yielding better accuracy and repeatability.

Inlet

Flow circulates in the trim, jet streams impinge in the centerline and is directed to the outlet.

- Cage
- Outer Sleeve
- Seat Face
- Inner Sleeve
- Control Surface
- Seat Face
- Nozzle

Multi Orifice Nozzle Technology

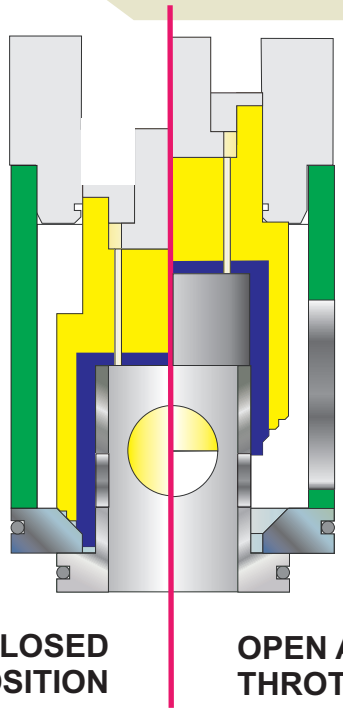

Multi Orifice Nozzle

The Multi Orifice Nozzle trim configuration has been field-tested and proven to deliver superior wear resistance and control performance. The trim controls high velocity fluid during pressure reduction by directing the flow to the center of the flow nozzle. The erosive energy is contained and converted within the flow trim. As a result of this conversion, the valve outlet is protected from high velocity flow impingement.
The wear is isolated to the expendable trim components instead of the valve wall which, in turn, reduces the potential for release of fluids to the environment.

Tri-Seat Sealing Technology

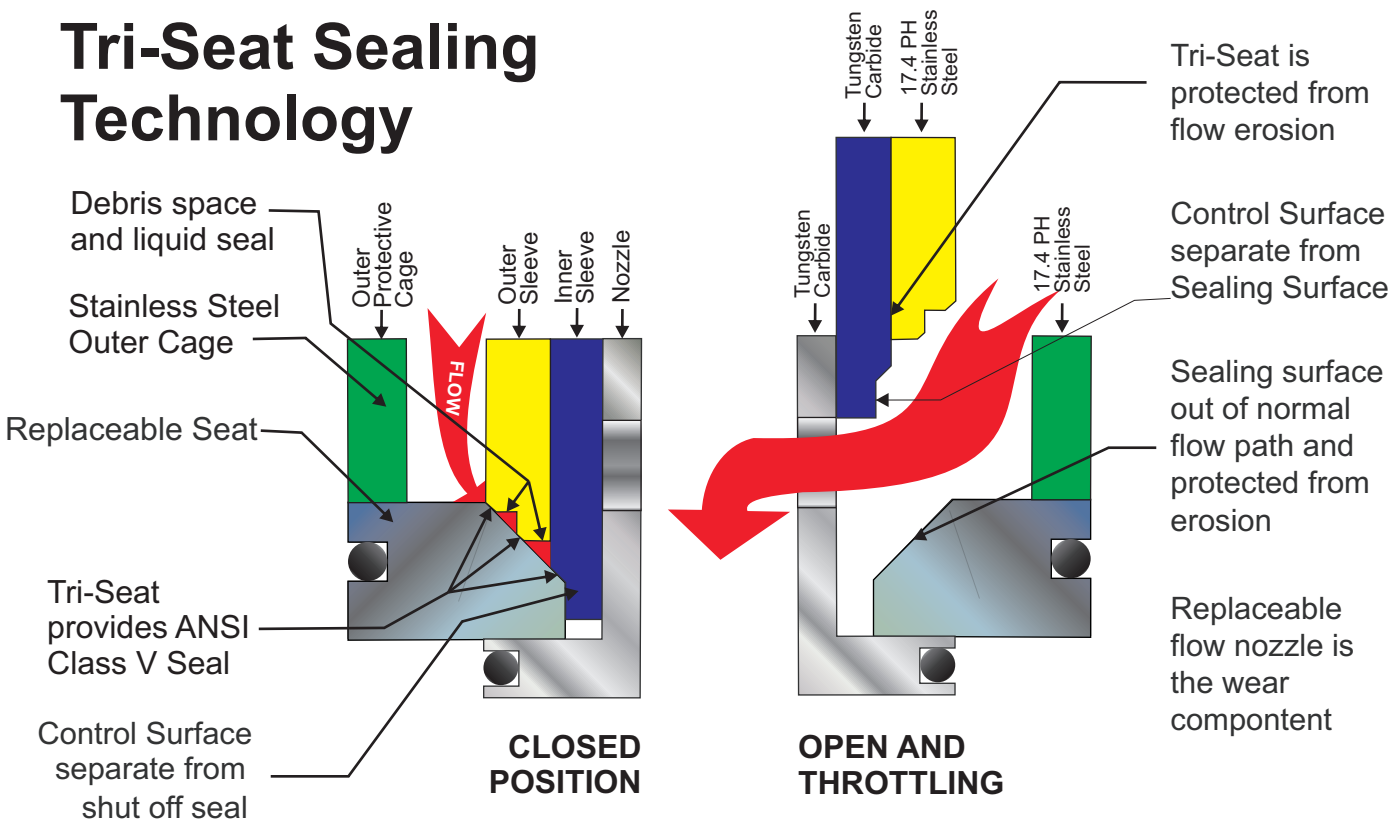

RB Valve Design Features

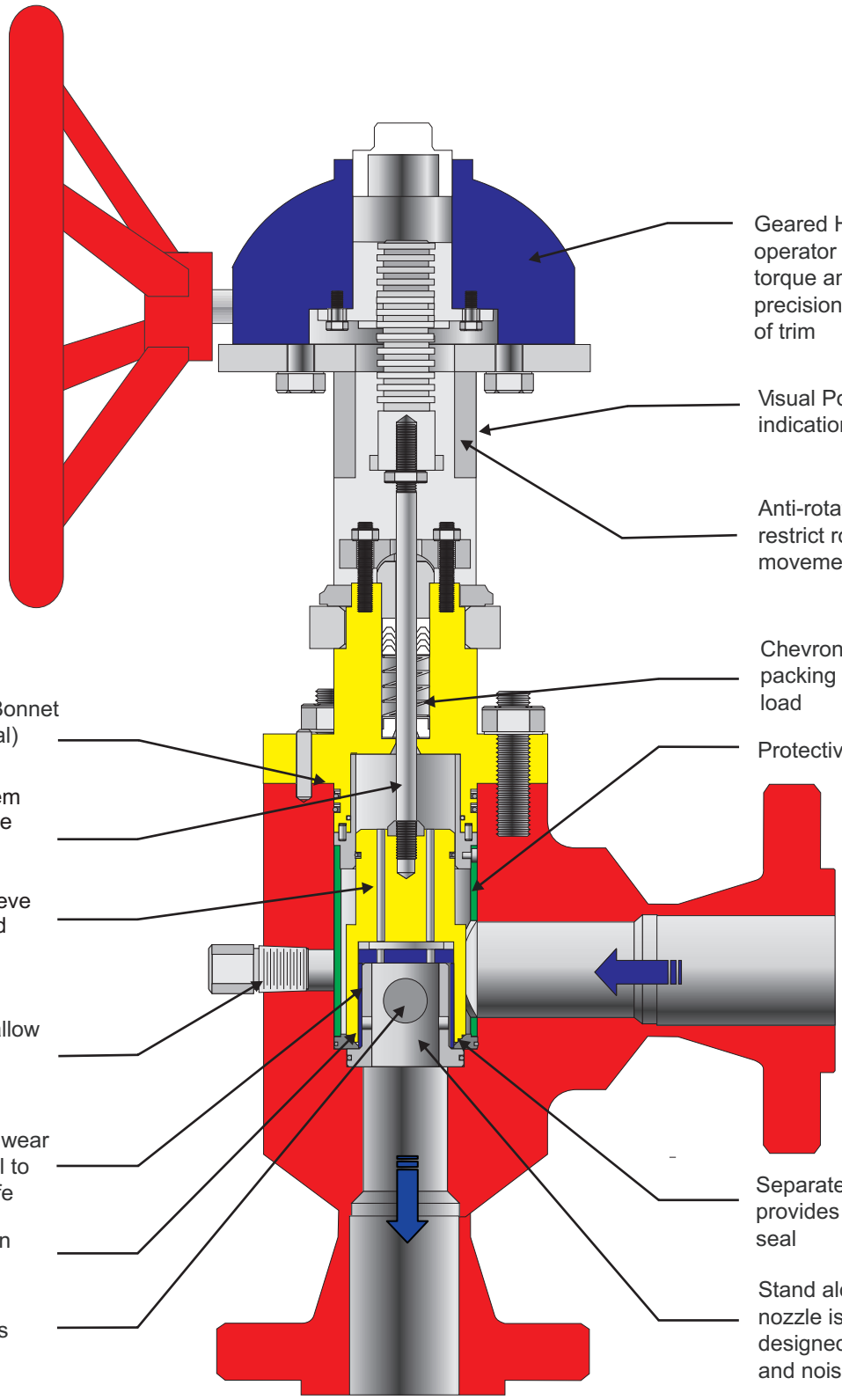

RP Positive Choke Valve

RP2 RP3 RP4

Features of “RP” Valve design

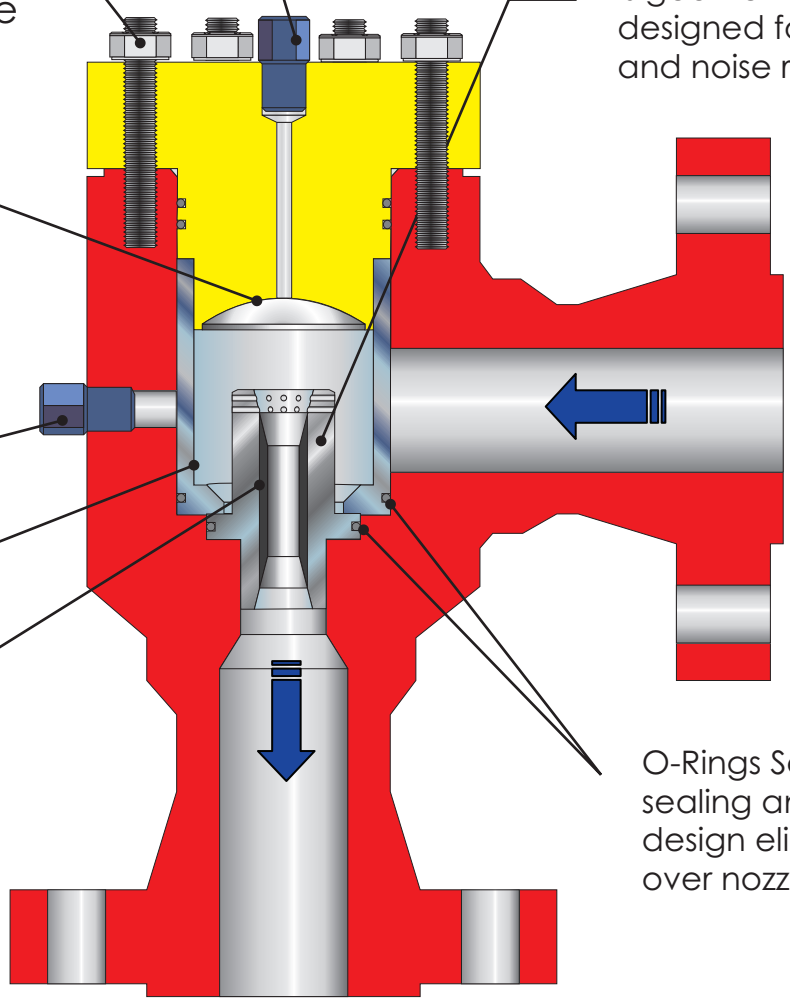

Low Cv Trim Applications

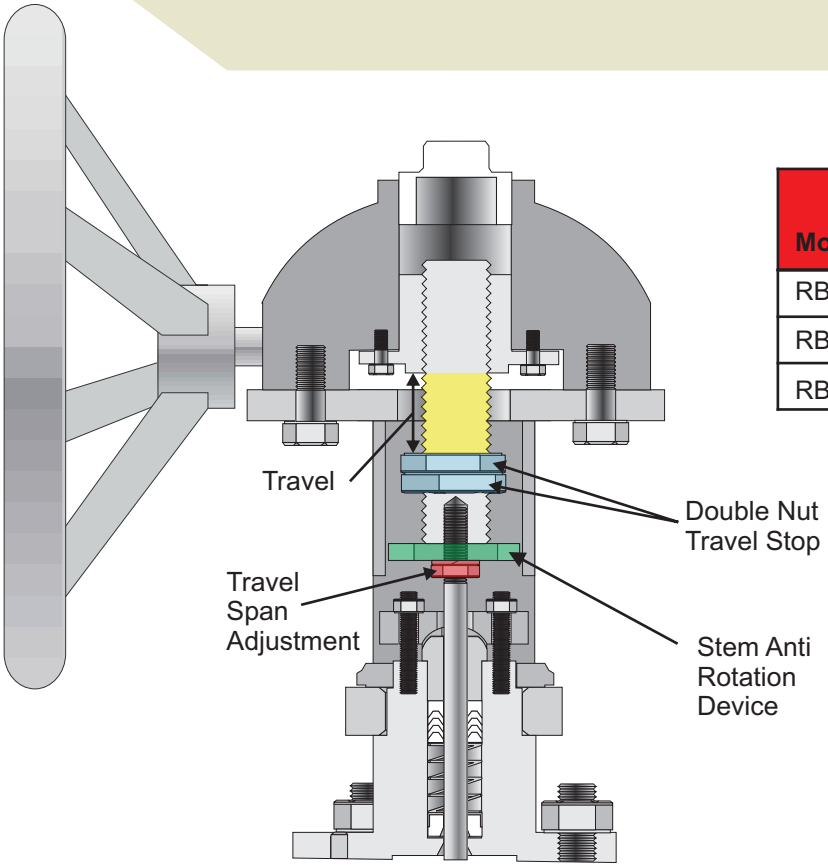

TRAVEL STOP AND SPAN ADJUSTMENT

Model	Cv	Travel		Turns	
		Full	Trim	Full	Trim
RB2	6	.75	.25	33	15.5
RB3	12	1.00	.50	42	21
RB4	24	1.375	.75	75	36.75

Geared hand wheel operators designed for “Low Cv” Trim applications have 42 turns per inch of stem travel. This option is only available on RB2, RB3 and RB4 Models both Standard and High Pressure.

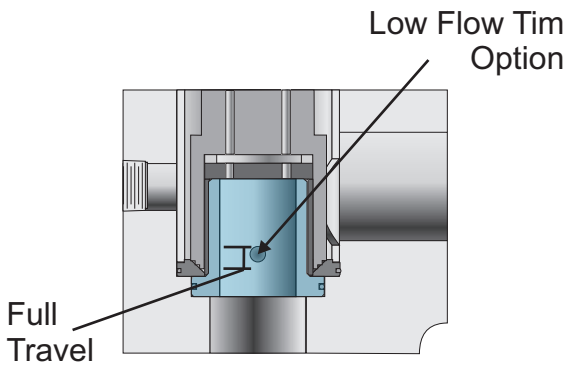

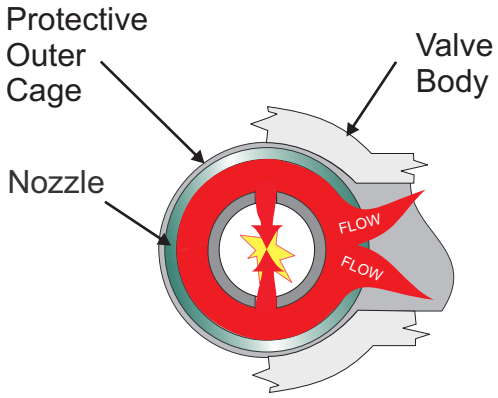

Flow Converging in the center line of the nozzle

RB-1 Valve With Diaphragm Actuator

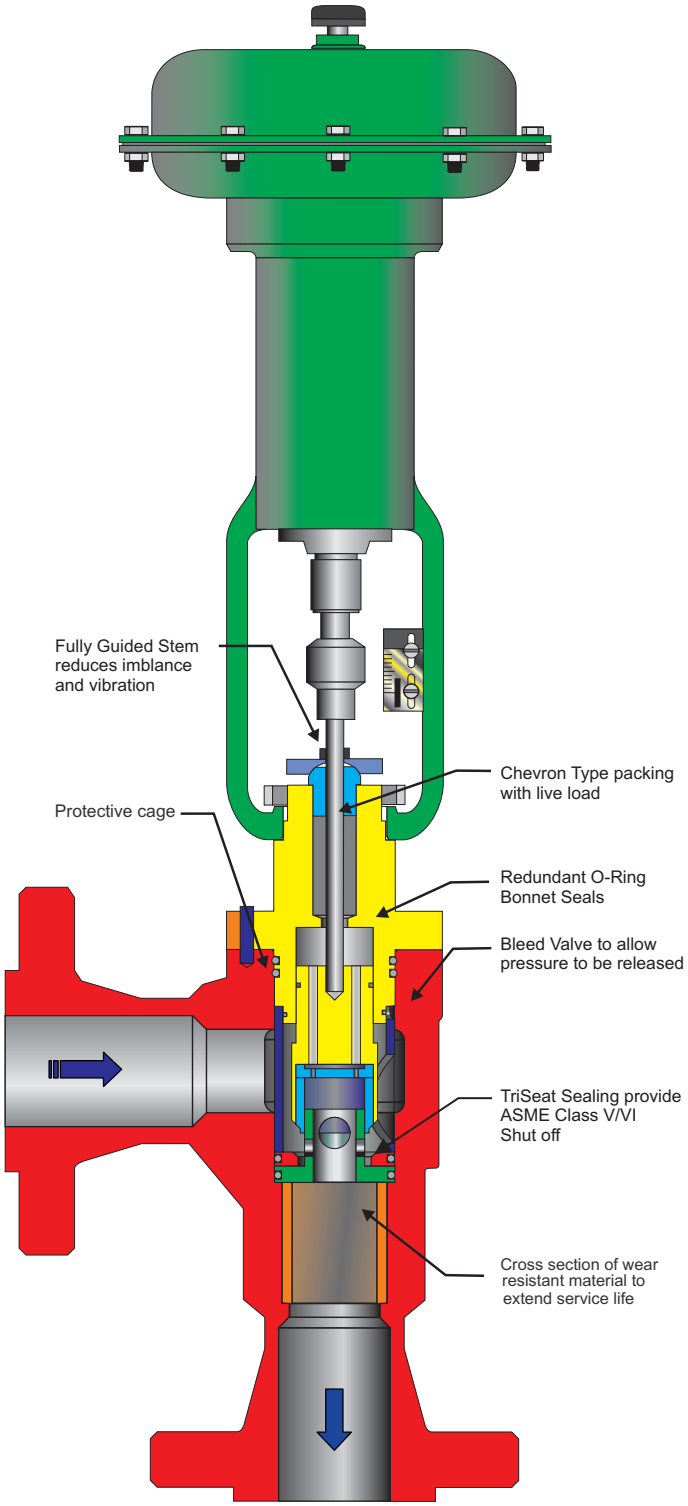

Automated R-B1

RB Valve With Stepping Actuator

Stepping Actuators available with Hydraulic or Pneumatic Supply Options.

Remote Position and Control Options available per customer specification

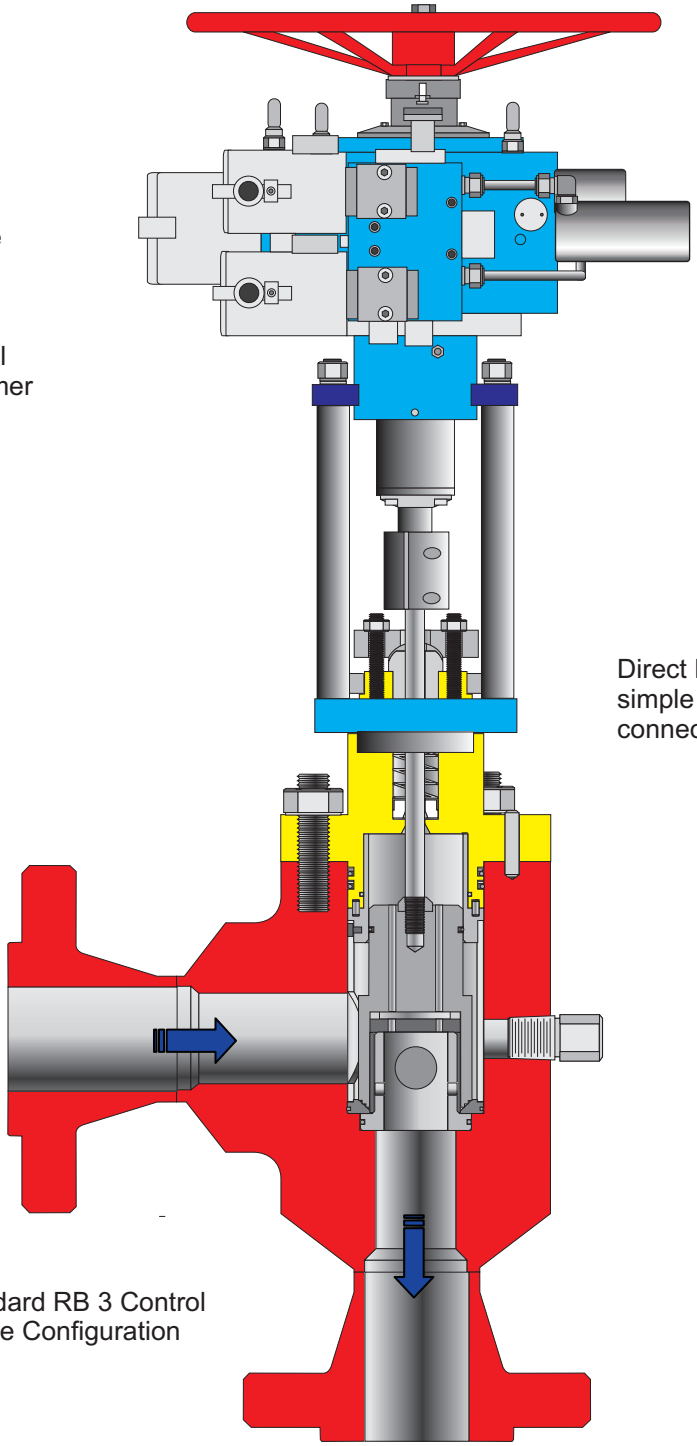

Direct Mount with simple coupler connection

Standard RB 3 Control Choke Configuration

FEATURES AND BENEFITS

Accurate control

The up and downstream pressure-balanced trim and the low-friction seals produce very low breakaway, shut-in and running thrust requirements resulting in smaller actuator and enable precise control.

Bolted Bonnet

Because the Safety Bonnet is bolted into the body, it avoids the well-known risks of corrosion, cross threading and galling in large threaded connection in environments with debris disassembly, associated with a bolted bonnet choke valves.

Safety Body Pressure Bleed Valve

The potential for buildup or trapped pressure is eliminated by the installation of a High Pressure Stainless Steel Body Pressure bleed valve installed in accordance with the requirements of API6A.

Extended Mean time between Service

Robust design and liberal application of hardened materials, efficient flow-geometry means the valves offer maximum production potential and minimum service requirements.

High Turndown Ratio

Clean flow geometry, high capacity and accurate control means the valve is suitable for both start-up and end-of-field-life process scenarios. In short, our Control Choke Valves offer a one-valve solution for the full process life.

Easy maintenance

All Control Choke Valves are designed with special actuator mounting systems so the choke can be maintained without disassembly the actuator and components or instrument connections.

Optional features

- Control Choke Valves can have trims and actuators custom designed for specific requirements
- Special trims for noise reduction and sand control
- Reduced port and Maximum orifice trims are available for very high pressure or minimum pressure loss for a declining field

R-B Series Control Choke Part Numbering System

RB ___-___-___-___-___-___-___-___-___

NOMINAL BORE | SERVICE | INLET SIZE | INLET CLASS | OUTLET CLASS | OUTLET SIZE | SEAL MATERIAL | BODY MATERIAL | TRIM MATERIAL

NOMINAL BORE
2 2”
3 3”
4 4”
6 6”

SERVICE
00 STANDARD
01 NACE
03 WET CO-2
04 LOW TEMP/SOUR
06 FULL SS
08 SALT WATER

INLET SIZE
01 1 13/16”
02 2”
03 2 1/16”
04 2 9/16”
05 3”
06 3 1/8”
07 3 1/2”
08 4”
09 4 1/16”
10 6”
11 7 1/16”
12 8”
13 9”

INLET CLASS
01 RF 150 LB
02 RF 300 LB
03 RF 600 LB
04 RF 900 LB
05 RF 1500 LB
06 RF 2500 LB
07 RTJ 600 LB
08 RTJ 900 LB
09 RTJ 1500 LB
10 RTJ 2500 LB
11 API 3000 LB
12 API 5000 LB
13 BW

TRIM MATERIAL
01 TUNGSTEN CARBIDE
02 PH STAINLESS STEEL
03 EXTENDED WEAR TUNGSTEN CARBIDE

BODY MATERIAL
01 CARBON STEEL
03 410 STAINLESS STEEL
04 DUPLEX STAINLESS
05 316 STAINLESS STEEL

SEAL MATERIAL
00 SPECIAL
01 BUNA N / NBR
02 POLYURETHANE
03 EPT/ EPOM
04 FLUOROCARBON
06 NEOPRENE / CR
07 PEROXIDE CURED NBR
09 PTFE

OUTLET SIZE
01 1 13/16”
02 2”
03 2 1/16”
04 2 9/16”
05 3”
06 3 1/8”
07 3 1/2”
08 4”
09 4 1/16”
10 6”
11 7 1/16”
12 8”
13 9”

OUTLET CLASS
01 RF 150 LB
02 RF 300 LB
03 RF 600 LB
04 RF 900 LB
05 RF 1500 LB
06 RF 2500 LB
07 RTJ 600 LB
08 RTJ 900 LB
09 RTJ 1500 LB
10 RTJ 2500 LB
11 API 3000 LB
12 API 5000 LB
13 BW

MODEL R-B2
Control Choke
Parts Diagram

2 Inch Control Choke

Cv = 35
Bean Size = 78 / 64th's
Stroke Length = 1.28"
Stem Diameter = .375"
*Parts not included on actuator
**Optional depending on actuator type
(Contact TVT for information)

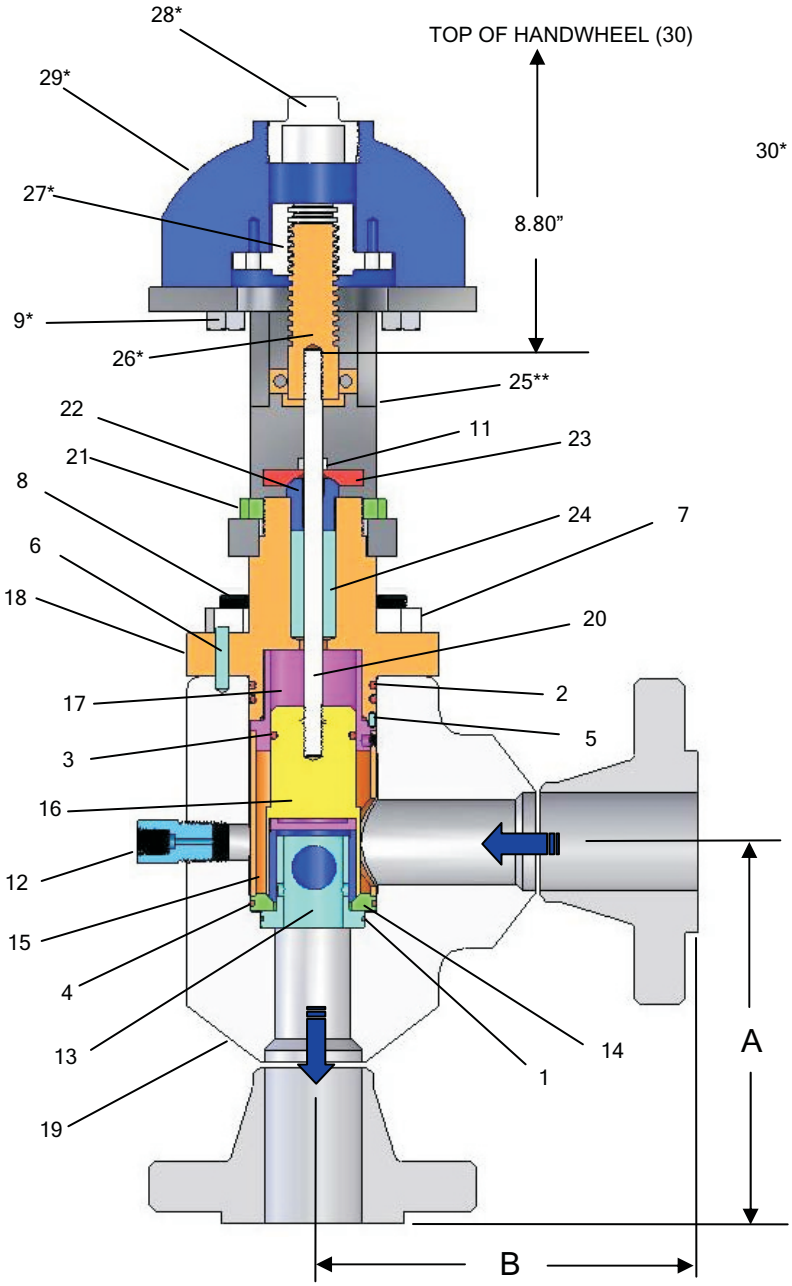

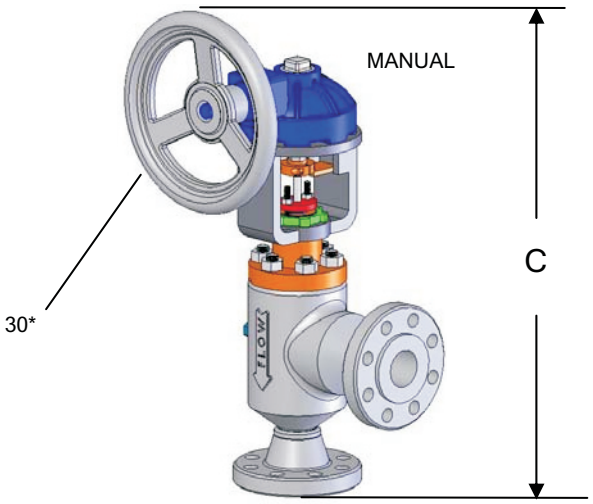

ITEM	DESCRIPTION	QTY
1	O-RING 2-032	2
2	O-RING 2-228	2
3	O-RING 2-221	1
4	O-RING 2-141	1
5	DOWEL PIN	2
6	DOWEL PIN	1
7	HEX NUT	8
8	STUD	8
9	HEX BOLT 1/2-13UNC	4
10*	STUD	2
11	HEX NUT	2
12	VENT VALVE	1
13	NOZZLE	1
14	SEAT	1
15	CAGE	1
16	EXTERNAL SLEEVE ASSEMBLY	1
17	EXTERNAL SLEEVE GUIDE	1
18	BONNET	1
19	BODY/FLANGE WELDMENT	1
20	STEM	1
21	YOKE LOCK NUT	1
22	PACKING FOLLOWER	1
23	PACKING FLANGE	1
24	PACKING	1
25	YOKE	1
26	ANTI-ROTATIONAL DEVICE	1
27	STEM ADAPTER	1
28	PIPE PLUG	1
29	DIAMOND GEAR ACTUATOR	1
30	HANDWHEEL	1

* ITEM NOT VISIBLE IN SECTIONED VIEW

MODEL RB2-15K
Control Choke
Parts Diagram

2 Inch HP Control Choke

Design Working Pressure = 15,000 PSI
Cv= 35
Bean Size = 78 / 64th's
Stroke Length = 1.28"
Stem Diameter = 1.00"
*Parts not included on actuator
**Optional depending on actuator

A= 12.95"
B= 12.95"
C= 24.00"
OAL= 36.59"
Bonnet Clearance= 25.85"

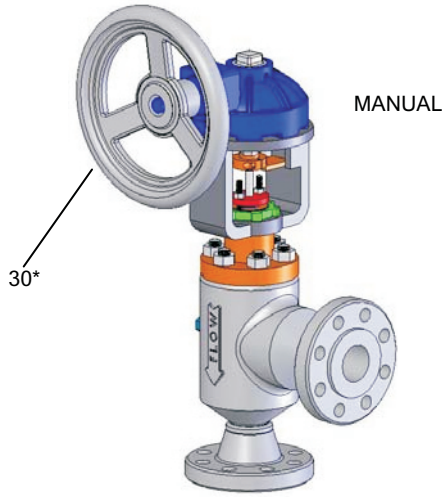

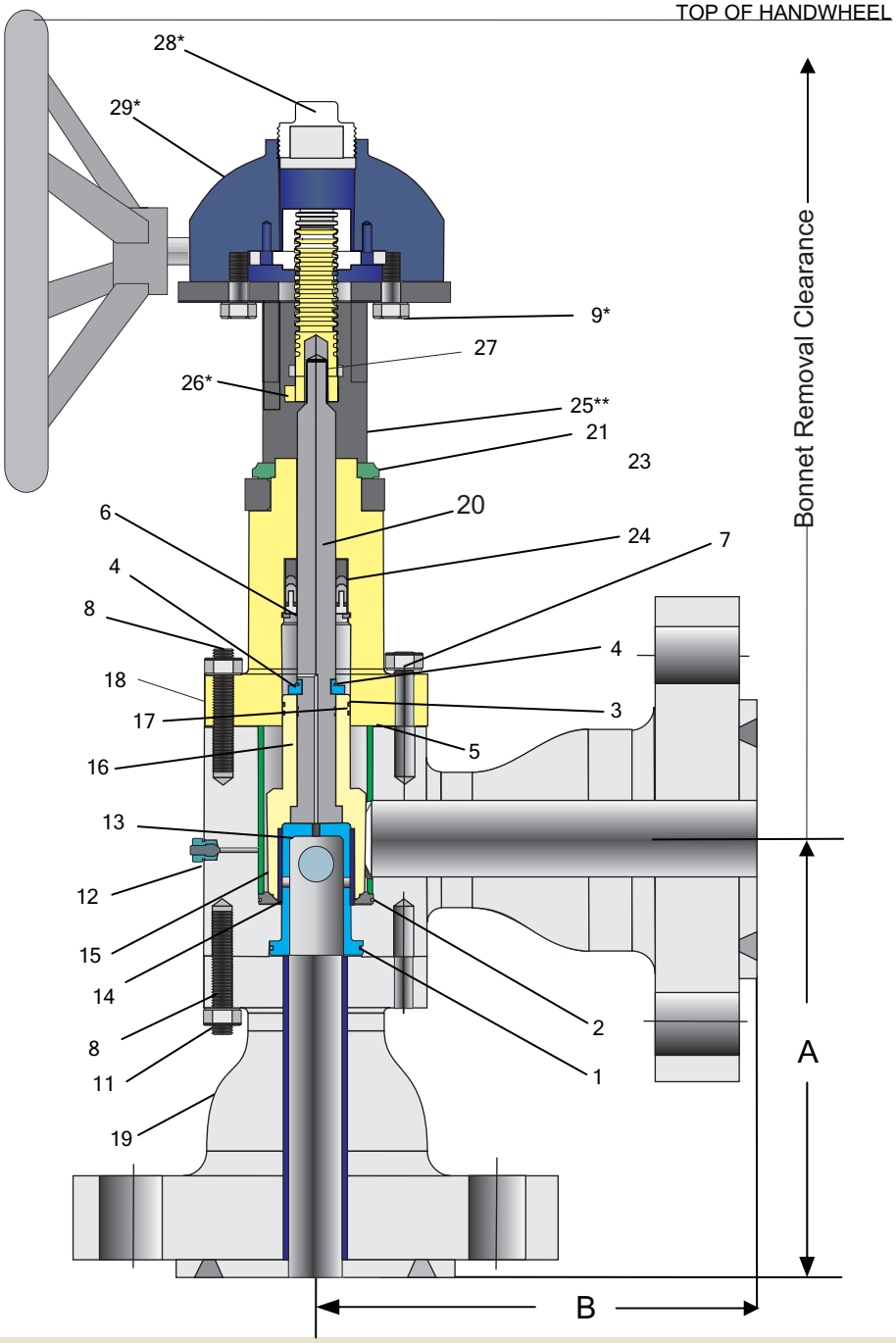

ITEM	DESCRIPTION
1	O-RING
2	O-RING
3	O-RING
4	RETAINING RING
5	DOWEL PIN
6	SPLIT RING
7	HEX NUT
8	STUD
9	HEX BOLT 1/2-13UNC
10*	STUD
11	HEX NUT
12	VENT VALVE
13	NOZZLE
14	SEAT
15	CAGE
16	EXTERNAL SLEEVE ASSEMBLY
17	BONNET SEAL
18	BONNET
19	BODY SPOOL
20	STEM
21	YOKE LOCK NUT
22	SPOOL
23	SPOOL / BODY SEAL
24	PACKING
25	YOKE
26	ANTI-ROTATIONAL DEVICE
27	STEM ADAPTER
28	PIPE PLUG
29	DIAMOND GEAR ACTUATOR
30	HANDWHEEL

* ITEM NOT VISIBLE IN SECTIONED VIEW

TAYLOR R-B2 CHOKE STANDARD DIMENSIONS AND WEIGHTS

CONNECTIONS		DIMENSIONS - IN. (MM.)			WEIGHT	
INLET	OUTLET	"A"	"B"	"C"	LB.	KG.
2" BW	2" BW	4.50 (114)	4.50 (114)	23.10 (587)	80	36
2" 300 RFF	2" 300 RFF	7.25 (184)	7.25 (184)	25.85 (657)	96	44
2" 600 RFF	2" 600 RFF	7.62 (194)	7.62 (194)	26.22 (666)	100	45
2" 600 RTJ	2" 600 RTJ	7.69 (195)	7.69 (195)	26.29 (668)	100	45
2" 900/1500 RTJ	2" 900/1500 RTJ	8.81 (223)	8.81 (223)	27.41 (696)	128	58
2" 2500 RTJ	2" 2500 RTJ	9.81 (249)	9.81 (249)	28.41 (722)	164	74
3" BW	3" BW	4.50 (114)	4.50 (114)	23.10 (587)	80	36
3" 300 RFF	3" 300 RFF	7.63 (194)	7.63 (194)	26.23 (666)	110	50
3" 600 RFF	3" 600 RFF	8.00 (203)	8.00 (203)	26.60 (676)	126	57
3" 900 RTJ	3" 900 RTJ	8.81 (224)	8.81 (224)	27.41 (696)	138	63
3" 1500 RFF	3" 1500 RFF	9.38 (238)	9.38 (238)	27.98 (711)	176	80
3" 1500 RTJ	3" 1500 RTJ	9.44 (240)	9.44 (240)	28.04 (712)	176	80
3" 2500 RTJ	3" 2500 RTJ	11.44 (290)	11.44 (290)	30.04 (763)	268	122
2 1/16 API 5000	2 1/16 API 5000	8.81 (224)	8.81 (224)	27.41 (696)	128	58
2 1/16 API 10000	2 1/16 API 10000	9.01 (229)	9.01 (229)	27.61 (701)	122	55
2 1/16 API 15000	2 1/16 API 15000	9.01 (229)	9.01 (229)	27.61 (701)	122	55
2 9/16 API 5000	2 9/16 API 5000	8.94 (227)	8.94 (227)	27.54 (700)	154	70
2 9/16 API 10000	2 9/16 API 10000	9.52 (242)	9.52 (242)	28.12 (714)	150	68
2 9/16 API 15000	2 9/16 API 15000	9.52 (242)	9.52 (242)	28.12 (714)	150	68
3 1/8 API 5000	3 1/8 API 5000	9.44 (240)	9.44 (240)	28.04 (712)	176	80
3 1/8 API 10000	2 9/16 API 10000	9.52 (242)	9.52 (242)	28.12 (714)	243	110
3 1/8 API 15000	3 1/8 API 15000	9.52 (242)	9.52 (242)	20.5.12 (521)	496	225
4 1/16 API 10000	4 1/16 API 10000	10.6 (269)	10.6 (269)	21.75 (552)	534	242
4 1/16 API 15000	4 1/16 API 15000	12.95 (329)	12.95 (329)	24.00 (609)	670	304

ALL DIMENSIONS ARE +/- .10”

2 Inch Control Choke

Cv = 35
Bean Size = 78 / 64th's

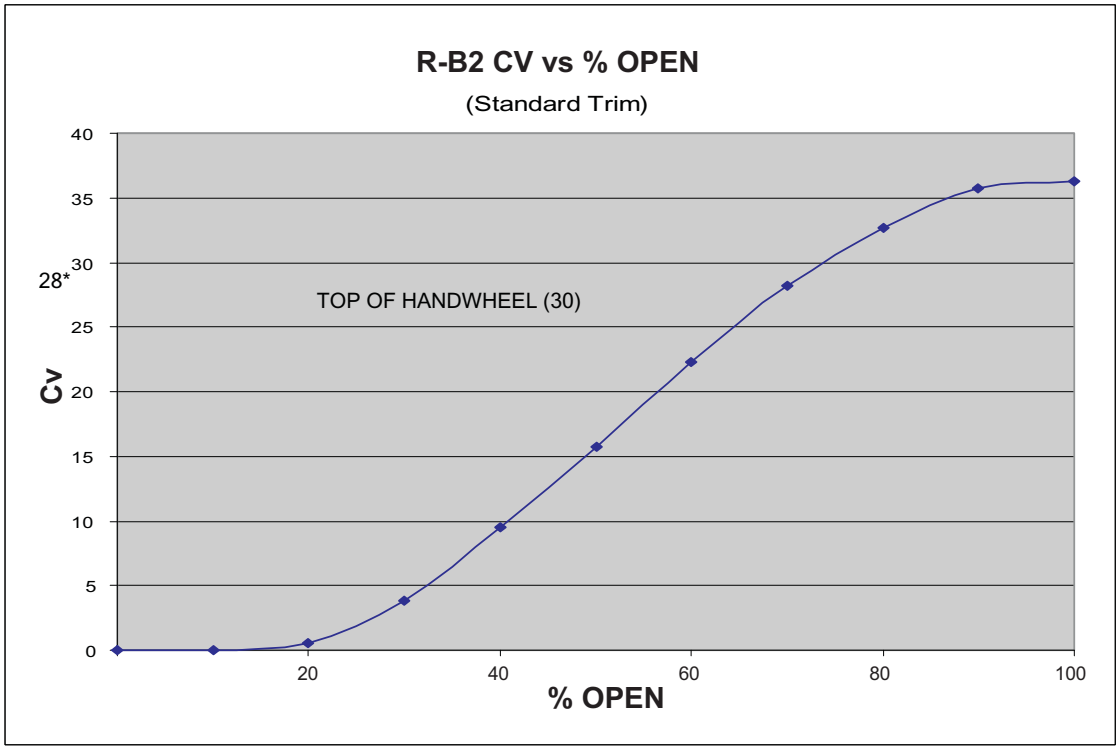

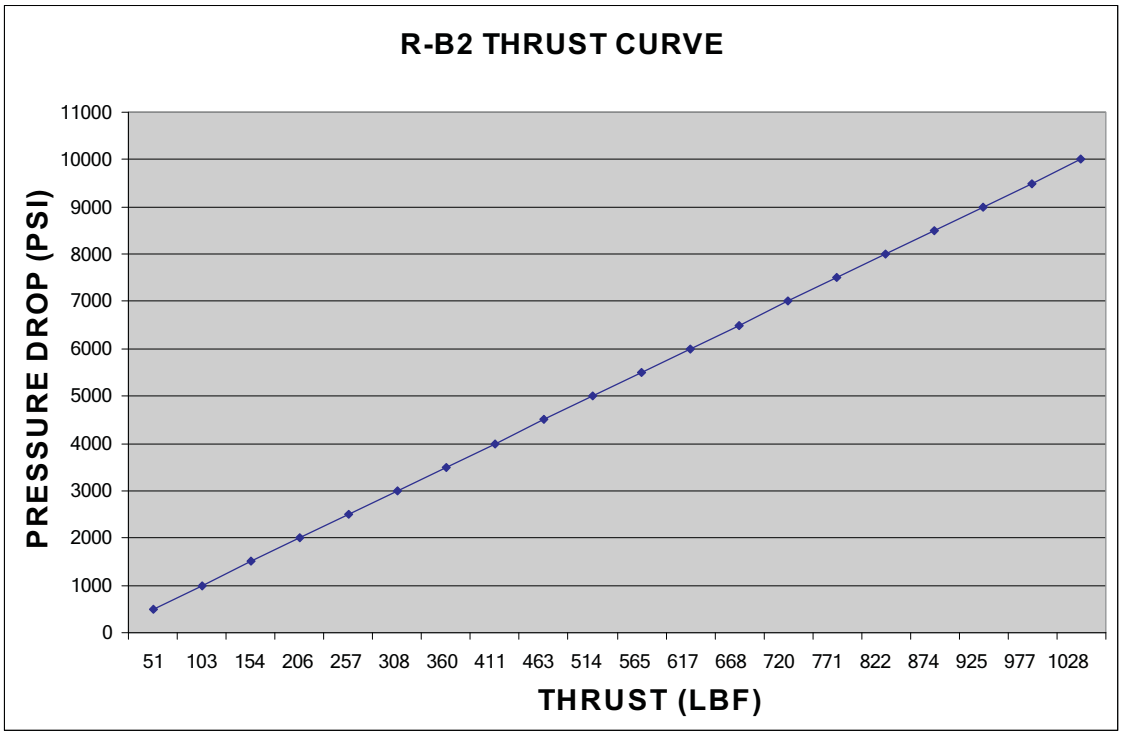

MODEL R-B3
Control Choke
Parts Diagram

R-B3 Control Choke

Cv = 64
Bean Size = 105 / 64th's
Stroke Length = 1.75"
Stem Diameter = .50"
*Parts not included on actuator
**Optional depending on actuator type
(Contact TVT for information)

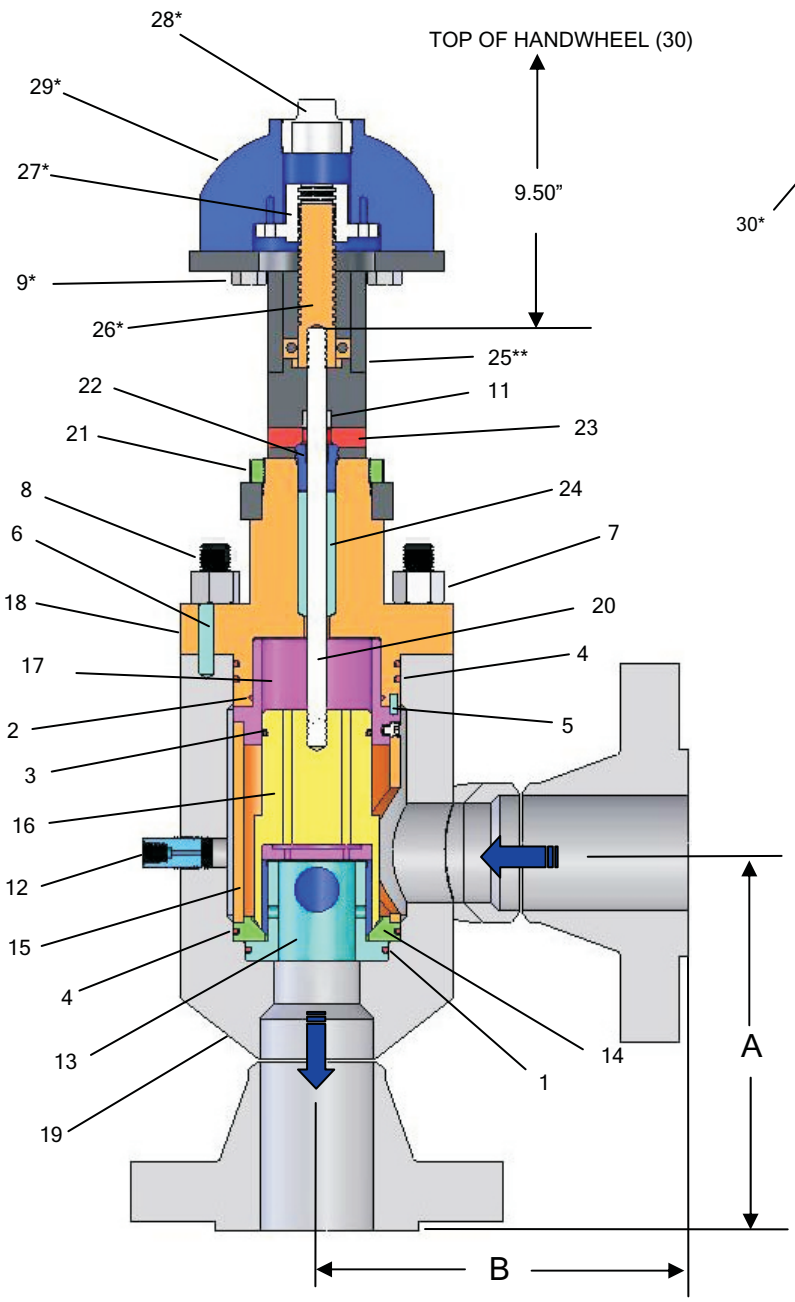

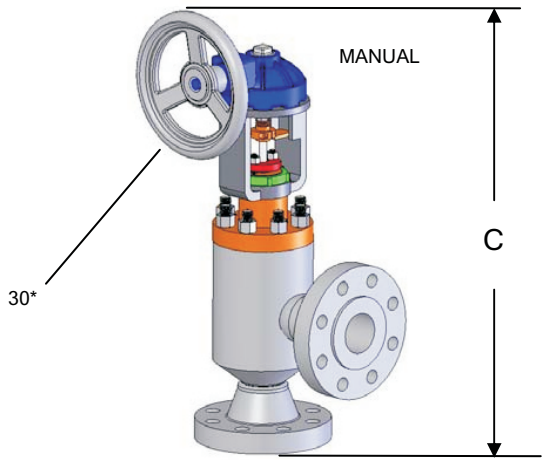

ITEM	DESCRIPTION	QTY
1	O-RING 2-237	1
2	O-RING 2-152	1
3	O-RING 2-230	1
4	O-RING 2-242	3
5	DOWEL PIN	2
6	DOWEL PIN	1
7	HEX NUT	8
8	STUD	8
9	HEX BOLT 1/2-13UNC	4
10*	STUD	2
11	HEX NUT	2
12	VENT VALVE	1
13	NOZZLE	1
14	SEAT	1
15	CAGE	1
16	EXTERNAL SLEEVE ASSEMBLY	1
17	EXTERNAL SLEEVE GUIDE	1
18	BONNET	1
19	BODY/FLANGE WELDMENT	1
20	STEM	1
21	YOKE LOCK NUT	1
22	PACKING FOLLOWER	1
23	PACKING FLANGE	1
24	PACKING	1
25	YOKE	1
26	ANTI-ROTATIONAL DEVICE	1
27	STEM ADAPTER	1
28	PIPE PLUG	1
29	DIAMOND GEAR ACTUATOR	1
30	HANDWHEEL	1

* ITEM NOT VISIBLE IN SECTIONED VIEW

TAYLOR R-B3 CHOKE STANDARD DIMENSIONS AND WEIGHTS

CONNECTIONS		DIMENSIONS - IN. (MM.)			WEIGHT	
INLET	OUTLET	"A"	"B"	"C"	LB.	KG.
3" BW	3" BW	5.25 (133)	5.25 (133)	28.12 (714)	154	70
3" 150 RFF	3" 150 RFF	8.00 (203)	8.00 (203)	30.87 (784)	177	80
3" 300 RFF	3" 300 RFF	8.38 (213)	8.38 (213)	31.25 (794)	185	83
3" 600 RFF	3" 600 RFF	8.75 (222)	8.75 (222)	31.62 (803)	190	86
3" 600 RTJ	3" 600 RTJ	8.81 (223)	8.81 (223)	31.68 (805)	190	86
3" 900 RFF	3" 900 RFF	9.50 (241)	9.50 (241)	32.37 (822)	212	96
3" 900 RTJ	3" 900 RTJ	9.56 (243)	9.56 (243)	32.43 (824)	212	96
3" 1500 RFF	3" 1500 RFF	10.12 (257)	10.12 (257)	33.00 (8.38)	250	114
3" 1500 RTJ	3" 1500 RTJ	10.19 (259)	10.19 (259)	33.06 (840)	250	114
3" 2500 RFF	3" 2500 RFF	12.13 (308)	12.13 (308)	35.00 (889)	342	155
3" 2500 RTJ	3" 2500 RTJ	12.25 (311)	12.25 (311)	35.12 (892)	342	155
4" BW	4" BW	5.25 (133)	5.25 (133)	28.12 (714)	154	70
4" 150 RFF	4" 150 RFF	8.25 (210)	8.25 (210)	31.12 (790)	187	85
4" 300 RFF	4" 300 RFF	8.62 (219)	8.62 (219)	31.49 (800)	207	94
4" 600 RFF	4" 600 RFF	9.50 (241)	9.50 (241)	32.37 (822)	228	104
4" 600 RTJ	4" 600 RTJ	9.56 (243)	9.56 (243)	32.43 (824)	228	104
4" 900 RFF	4" 900 RFF	10.00 (254)	10.00 (254)	32.87 (835)	256	116
4" 900 RTJ	4" 900 RTJ	10.06 (256)	10.06 (256)	32.93 (836)	256	116
4" 1500 RFF	4" 1500 RFF	10.38 (263)	10.38 (263)	33.25 (845)	292	133
4" 1500 RTJ	4" 1500 RTJ	10.44 (265)	10.44 (265)	33.31 (846)	292	133
4" 2500 RFF	4" 2500 RFF	13.00 (330)	13.00 (330)	35.87 (911)	444	201
4" 2500 RTJ	4" 2500 RTJ	13.19 (335)	13.19 (335)	36.06 (916)	444	201
3 1/8 API 3000	3 1/8 API 3000	9.56 (342)	9.56 (342)	32.43 (824)	212	96
3 1/8 API 5000	3 1/8 API 5000	10.19 (258)	10.19 (258)	33.06 (840)	250	114
4 1/16 API 3000	4 1/16 API 3000	10.06 (255)	10.06 (255)	32.93 (836)	256	116
4 1/16 API 5000	4 1/16 API 5000	10.44 (265)	10.44 (265)	33.31 (846)	292	133

ALL DIMENSIONS ARE +/- .10"

TAYLOR R-B4 CHOKE STANDARD DIMENSIONS AND WEIGHTS

CONNECTIONS		DIMENSIONS - IN. (MM.)			WEIGHT	
INLET	OUTLET	"A"	"B"	"C"	LB.	KG.
4" BW	4" BW	6.50 (165)	6.50 (165)	34.38 (873)	367	166
4" 150 RFF	4" 150 RFF	9.50 (241)	9.50 (241)	37.38 (949)	397	180
4" 300 RFF	4" 300 RFF	9.88 (251)	9.88 (251)	37.76 (959)	417	189
4" 600 RFF	4" 600 RFF	10.75 (273)	10.75 (273)	38.63 (981)	451	205
4" 600 RTJ	4" 600 RTJ	10.81 (275)	10.81 (275)	38.69 (983)	451	205
4" 900 RFF	4" 900 RFF	11.25 (286)	11.25 (286)	39.13 (994)	479	217
4" 900 RTJ	4" 900 RTJ	11.31 (287)	11.31 (287)	39.19 (995)	479	217
4" 1500 RFF	4" 1500 RFF	11.63 (295)	11.63 (295)	39.51 (1004)	515	234
4" 1500 RTJ	4" 1500 RTJ	11.69 (297)	11.69 (297)	39.57 (1005)	515	234
4" 2500 RFF	4" 2500 RFF	14.25 (362)	14.25 (362)	42.13 (1070)	669	304
4" 2500 RTJ	4" 2500 RTJ	14.44 (367)	14.44 (367)	42.32 (1075)	669	304
6" BW	6" BW	6.50 (165)	6.50 (165)	34.38 (873)	367	166
6" 150 RFF	6" 150 RFF	10.00 (254)	10.00 (254)	37.88 (962)	415	188
6" 300 RFF	6" 300 RFF	10.38 (264)	10.38 (264)	38.26 (972)	451	205
6" 600 RFF	6" 600 RFF	11.38 (289)	11.38 (289)	39.26 (997)	529	240
6" 600 RTJ	6" 600 RTJ	11.44 (291)	11.44 (291)	39.32 (999)	529	240
6" 900 RFF	6" 900 RFF	12.25 (311)	12.25 (311)	40.13 (1019)	597	271
6" 900 RTJ	6" 900 RTJ	12.31 (313)	12.31 (313)	40.19 (1021)	597	271
6" 1500 RFF	6" 1500 RFF	13.50 (342)	13.50 (342)	41.38 (1051)	705	320
6" 1500 RTJ	6" 1500 RTJ	13.62 (346)	13.62 (346)	41.50 (1054)	705	320
6" 2500 RFF	6" 2500 RFF	17.50 (445)	17.50 (445)	45.38 (1153)	1133	514
6" 2500 RTJ	6" 2500 RTJ	17.75 (451)	17.75 (451)	45.63 (1159)	1133	514
4 1/16" 3000 API	4 1/16" 3000 API	11.31 (287)	11.31 (287)	39.19 (995)	479	217
4 1/16" 5000 API	4 1/16" 5000 API	11.69 (297)	11.69 (297)	39.57 (1005)	515	234
7 1/16" 3000 API	7 1/16" 3000 API	12.31 (313)	12.31 (313)	40.19 (1021)	597	271
7 1/16" 5000 API	7 1/16" 5000 API	13.63 (346)	13.63 (346)	41.51 (1054)	705	320

ALL DIMENSIONS ARE +/- .10”

4 Inch Control Choke

Cv = 164
Bean Size = 169 / 64th's
Stroke Length = 2.45"
Stem Diameter = .75"

*Parts not included on actuator
**Optional depending on actuator type
(Contact TVT for information)

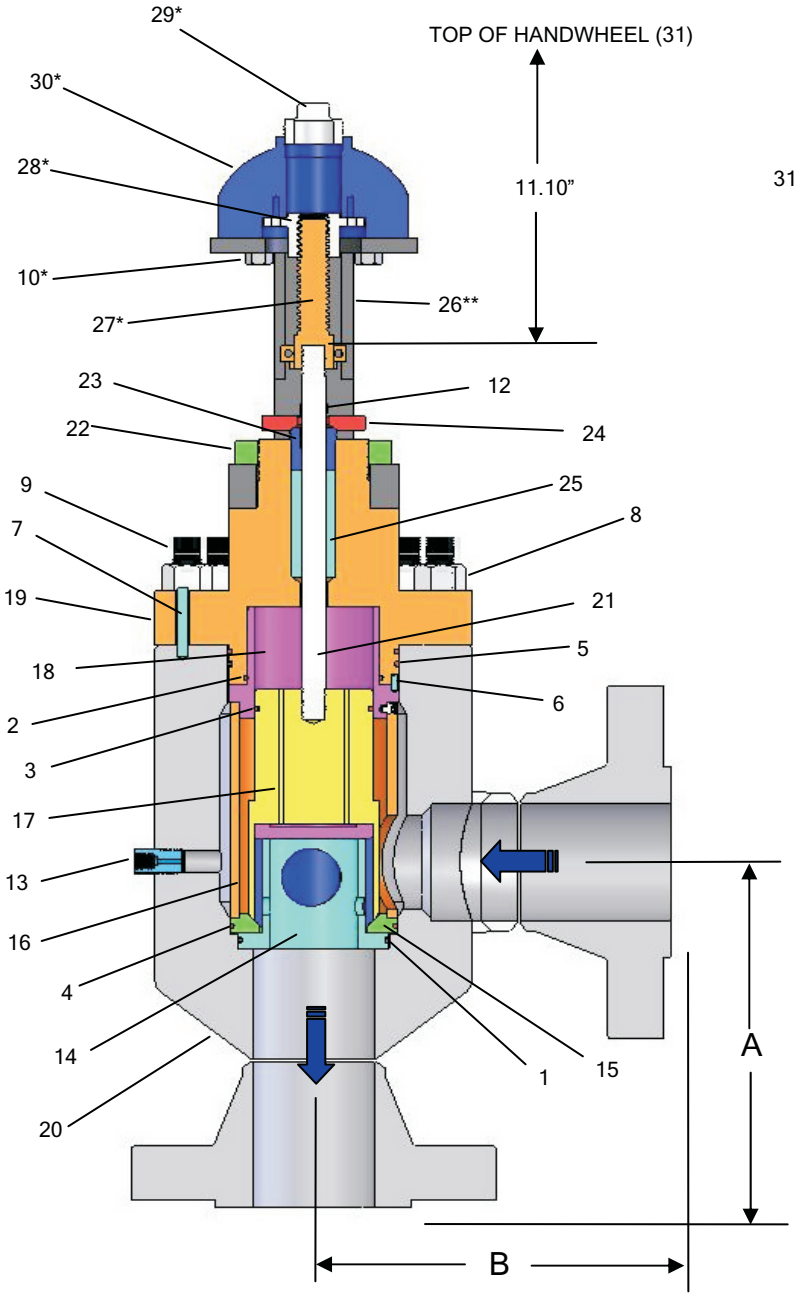

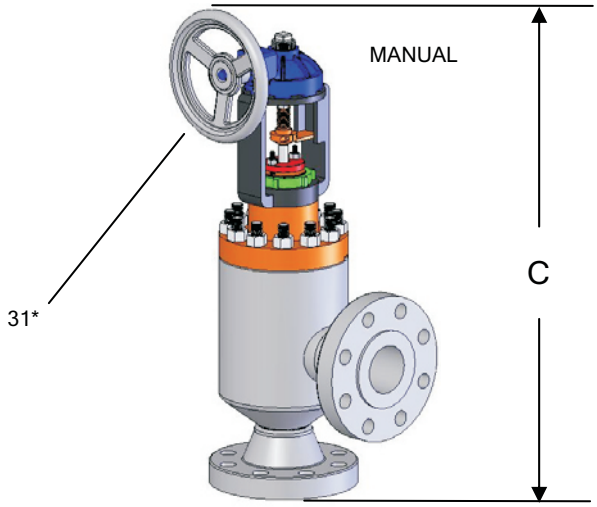

ITEM	DESCRIPTION	QTY
1	O-RING 2-246	1
2	O-RING 2-243	1
3	O-RING 2-238	1
4	O-RING 2-250	1
5	O-RING 2-251	2
6	DOWEL PIN	2
7	DOWEL PIN	1
8	HEX NUT	12
9	STUD	12
10	HEX BOLT 1/2-13UNC	4
11*	STUD	2
12	HEX NUT	2
13	VENT VALVE	1
14	NOZZLE	1
15	SEAT	1
16	CAGE	1
17	EXTERNAL SLEEVE ASSEMBLY	1
18	EXTERNAL SLEEVE GUIDE	1
19	BONNET	1
20	BODY/FLANGE WELDMENT	1
21	STEM	1
22	YOKE LOCK NUT	1
23	PACKING FOLLOWER	1
24	PACKING FLANGE	1
25	PACKING	1
26	YOKE	1
27	ANTI-ROTATIONAL DEVICE	1
28	STEM ADAPTER	1
29	PIPE PLUG	1
30	DIAMOND GEAR ACTUATOR	1
31	HANDWHEEL	1

* ITEM NOT VISIBLE IN SECTIONED VIEW

MODEL R-B3
Control Choke
Cv and Torque Charts

3 Inch Control Choke

Cv = 64
Bean Size = 105 / 64th's

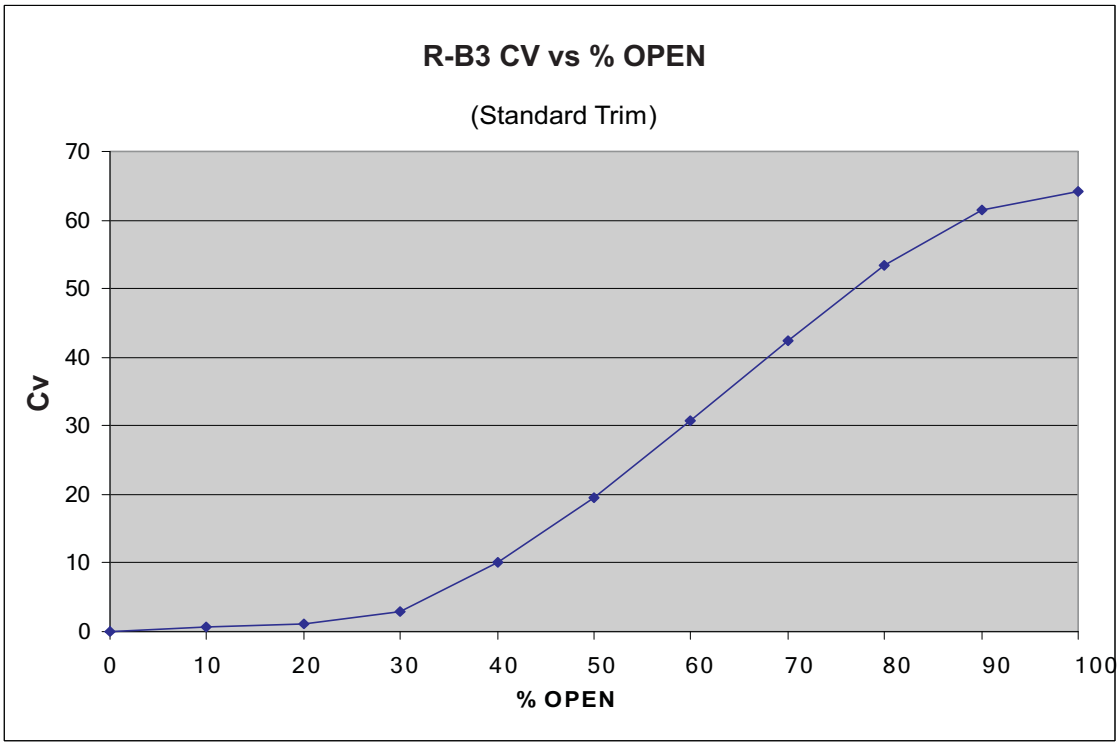

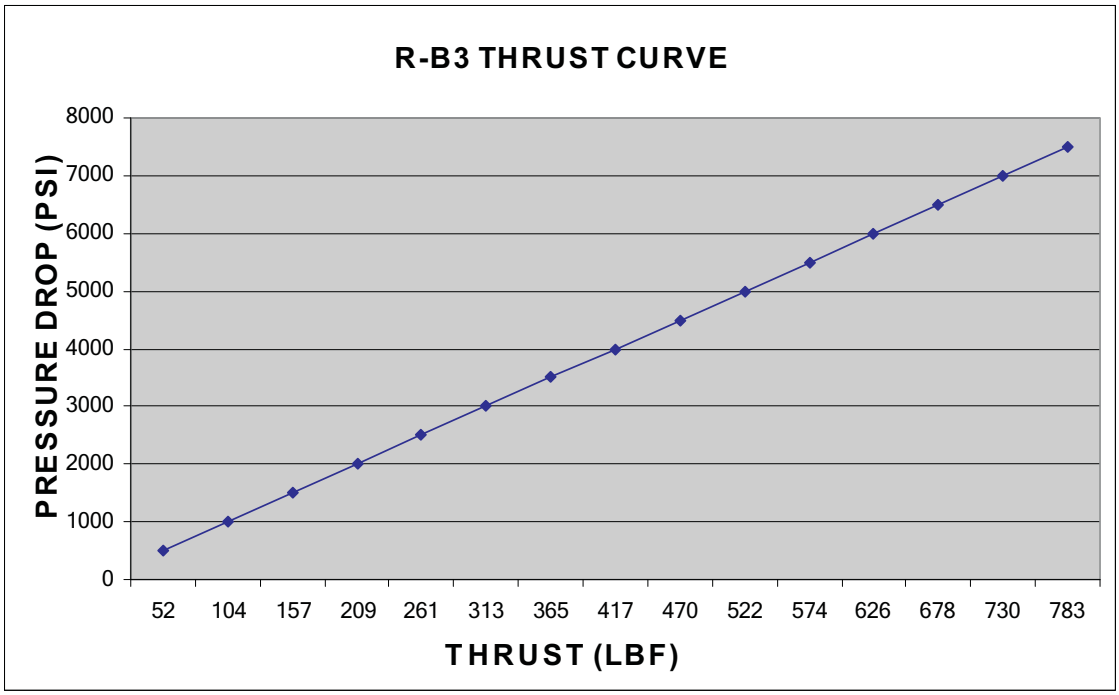

4 Inch Control Choke

Cv = 164
Bean Size = 169 / 64th's

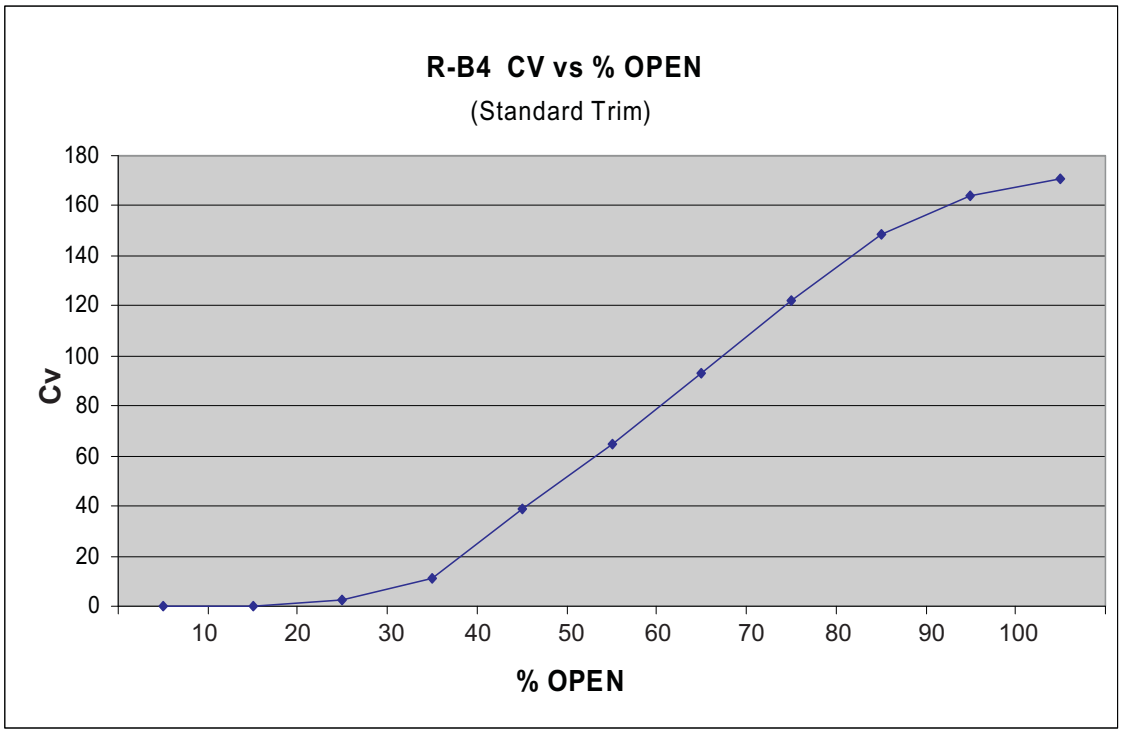

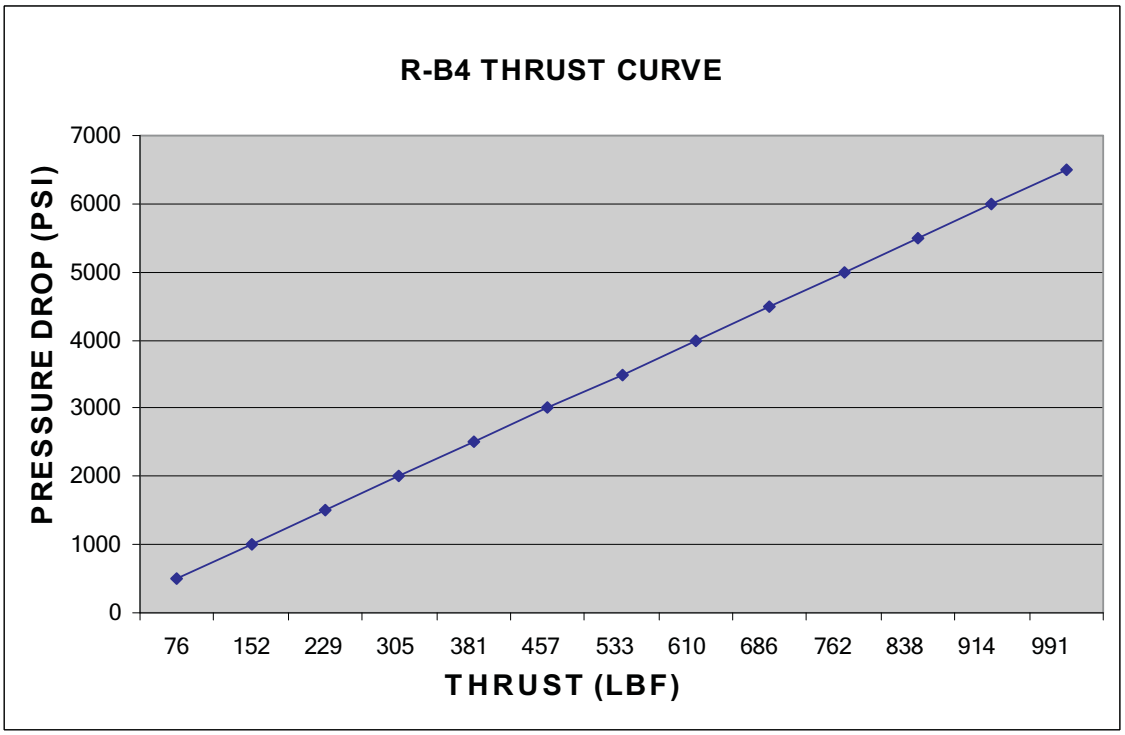

MODEL R-B6
Control Choke
Parts Diagram

R-B6 Control Choke

Cv = 420
Bean Size = 270 / 64th's
Stroke Length = 4.25"
Stem Diameter = 1.00"
*Parts not included on actuator
**Optional depending on actuator type
(Contact TVT for information)

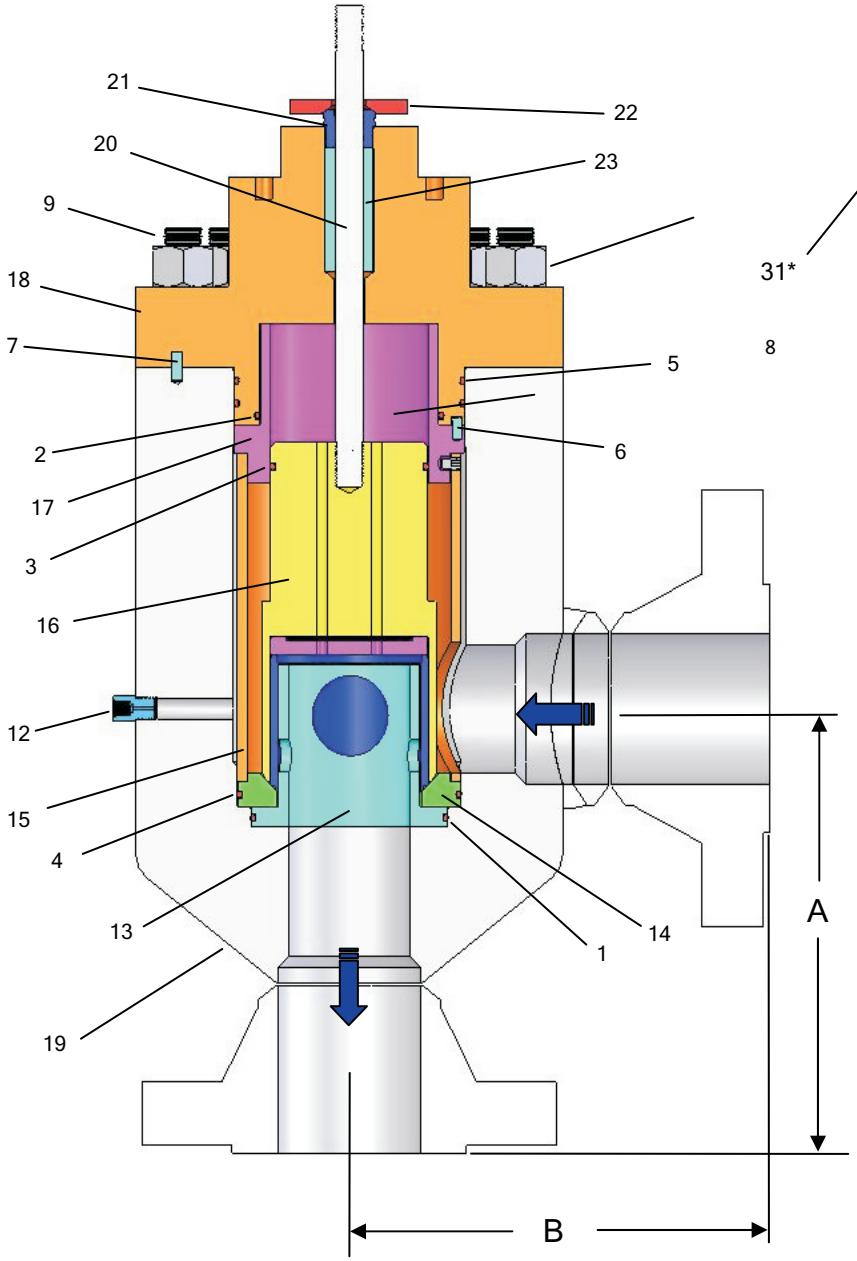

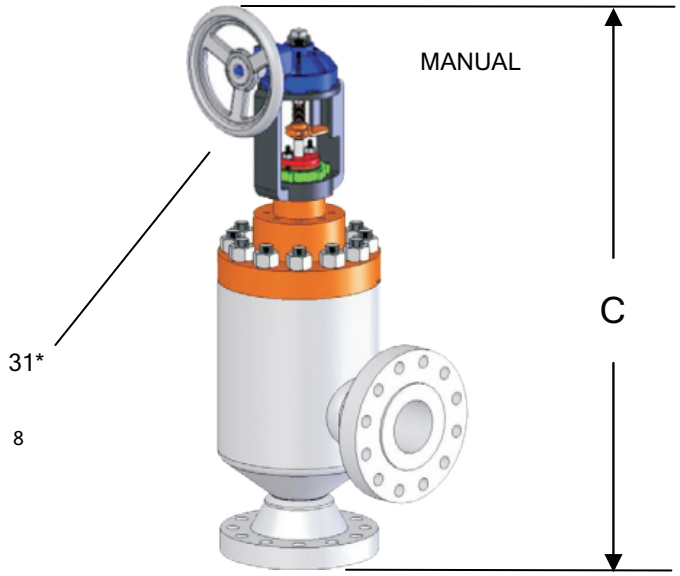

ITEM	DESCRIPTION	QTY
1	O-RING 2-364	1
2	O-RING 2-363	1
3	O-RING 2-356	1
4	O-RING 2-368	1
5	O-RING 2-369	2
6	DOWEL PIN	2
7	DOWEL PIN	1
8	HEX NUT	12
9	STUD	12
10*	STUD	2
11*	HEX NUT	2
12	VENT VALVE	1
13	NOZZLE	1
14	SEAT	1
15	CAGE	1
16	EXTERNAL SLEEVE ASSEMBLY	1
17	EXTERNAL SLEEVE GUIDE	1
18	BONNET	1
19	BODY/FLANGE WELDMENT	1
20	STEM	1
21	PACKING FOLLOWER	1
22	PACKING FLANGE	1
23	PACKING	1

* ITEM NOT VISIBLE IN SECTIONED VIEW

TAYLOR R-B6 CHOKE STANDARD DIMENSIONS AND WEIGHTS

CONNECTIONS		DIMENSIONS - IN. (MM.)			WEIGHT	
INLET	OUTLET	"A"	"B"	"C"	LB.	KG.
6" BW	6" BW	9.50 (241)	9.50 (241)	33.54 (852)	767	348
6" 150 RFF	6" 150 RFF	13.00 (330)	13.00 (330)	37.04 (941)	815	370
6" 300 RFF	6" 300 RFF	13.38 (340)	13.38 (340)	37.42 (950)	851	386
6" 600 RFF	6" 600 RFF	14.38 (365)	14.38 (365)	38.42 (976)	929	422
6" 600 RTJ	6" 600 RTJ	14.44 (368)	14.44 (368)	38.48 (977)	929	422
6" 900 RFF	6" 900 RFF	15.25 (387)	15.25 (387)	39.29 (998)	1003	455
6" 900 RTJ	6" 900 RTJ	15.31 (389)	15.31 (389)	39.35 (999)	1003	455
6" 1500 RFF	6" 1500 RFF	16.50 (419)	16.50 (419)	40.54 (1030)	1111	504
6" 1500 RTJ	6" 1500 RTJ	16.62 (422)	16.62 (422)	40.66 (1033)	1111	504
6" 2500 RFF	6" 2500 RFF	20.50 (521)	20.50 (521)	44.54 (1131)	1539	699
6" 2500 RTJ	6" 2500 RTJ	20.75 (527)	20.75 (527)	44.79 (1138)	1539	699
8" BW	8" BW	9.50 (241)	9.50 (241)	33.54 (852)	767	348
8" 150 RFF	8" 150 RFF	13.50 (343)	13.50 (343)	37.54 (954)	845	383
8" 300 RFF	8" 300 RFF	13.88 (353)	13.88 (353)	37.92 (963)	901	409
8" 600 RFF	8" 600 RFF	15.00 (381)	15.00 (381)	39.04 (992)	1007	457
8" 600 RTJ	8" 600 RTJ	15.06 (383)	15.06 (383)	39.10 (993)	1007	457
8" 900 RFF	8" 900 RFF	16.13 (410)	16.13 (410)	40.17 (1020)	1157	525
8" 900 RTJ	8" 900 RTJ	16.19 (411)	16.19 (411)	40.23 (1022)	1157	525
8" 1500 RFF	8" 1500 RFF	18.13 (461)	18.13 (461)	42.17 (1071)	1329	603
8" 1500 RTJ	8" 1500 RTJ	18.31 (465)	18.31 (465)	42.35 (1076)	1329	603
8" 2500 RFF	8" 2500 RFF	22.25 (565)	22.25 (565)	46.29 (1176)	1935	878
8" 2500 RTJ	8" 2500 RTJ	22.56 (573)	22.56 (573)	46.60 (1184)	1935	878
7 1/16 API 3000	7 1/16 API 3000	15.31 (389)	15.31 (389)	39.35 (999)	1157	525
7 1/16 API 5000	7 1/16 API 5000	16.63 (422)	16.63 (422)	40.67 (1033)	1329	603
9" 3000 API	9" 3000 API	16.19 (411)	16.19 (411)	40.23 (1022)	1510	684
9" 5000 API	9" 5000 API	18.31 (465)	18.31 (465)	42.35 (1076)	1532	694

ALL DIMENSIONS ARE +/- .10"

MODEL R-B6
Control Choke
Cv and Torque Charts

6 Inch Control Choke
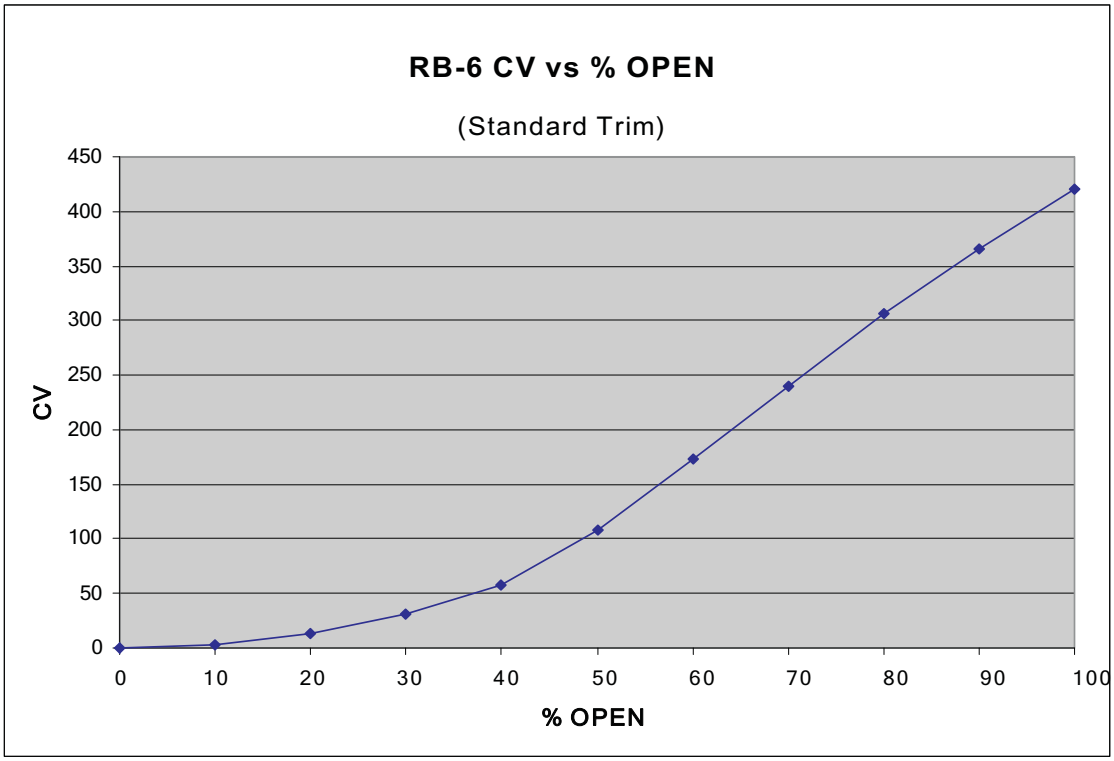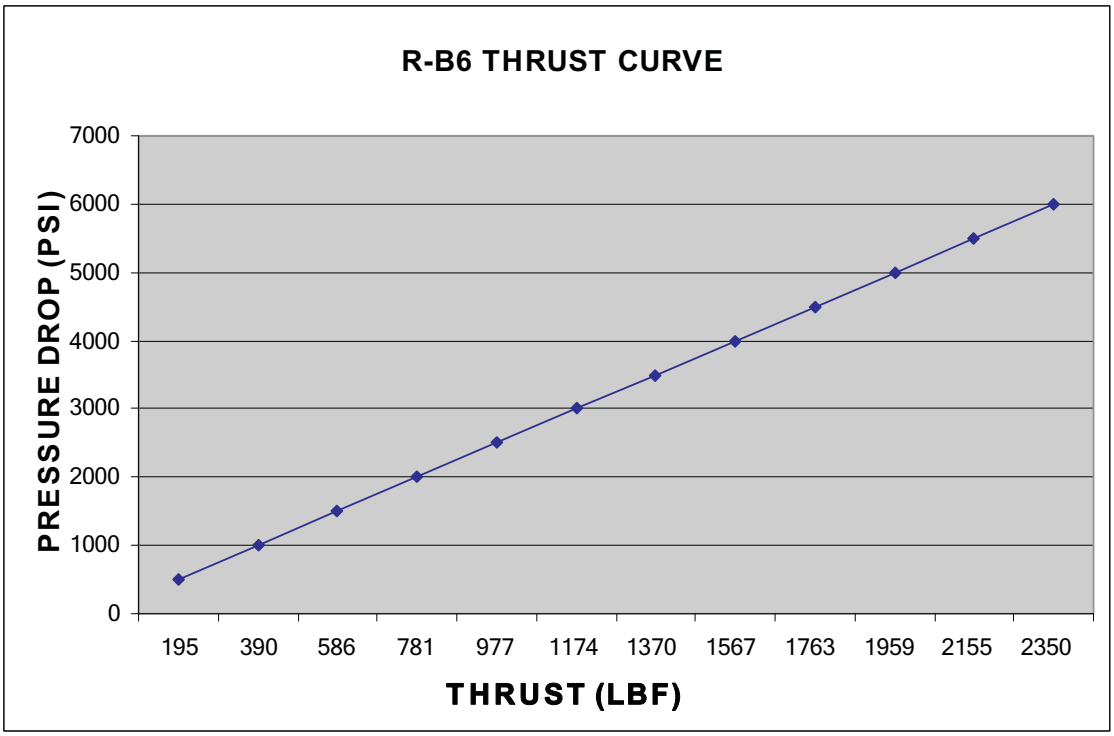
Cv = 420
Bean Size = 270 / 64th's